NOTES:

1. TIGHTEN CABLES AND TIES ONLY ENOUGH TO KEEP FROM SLIPPING. ALLOW FOR SOME TRUNK MOVEMENT. FABRIC LOOPS SHALL BE LONG ENOUGH TO ACCOMMODATE 1.5 IN. OF GROWTH AND BUFFER ALL BRANCHES FROM THE CABLE.
2. TUCK ANY LOOSE ENDS OF THE WIRE OR CABLE INTO THE WIRE WRAP SO THAT NO SHARP WIRE ENDS ARE EXPOSED.
3. INSTALL THREE GUY WIRES PER TREE, SPACED EVENLY AROUND THE TRUNK.
4. ASSURE THAT THE BEARING SURFACE OF THE PROTECTIVE COVERING OF THE CABLE AGAINST THE TREE TRUNK IS A MINIMUM OF 0.5 IN.
5. STAKES TO BE INSTALLED A MINIMUM OF 12" FROM TRUNK OR JUST OUTSIDE THE ROOTBALL, WHICHEVER IS GREATER.
6. REMOVE ALL STAKING AS SOON AS THE TREE HAS GROWN SUFFICIENT ROOTS.
7. STAKES SHALL BE REMOVED NO LATER THAN THE END OF THE FIRST GROWING SEASON AFTER PLANTING.
8. TREES WITH POOR QUALITY ROOT BALLS OR ROOT BALLS THAT HAVE BEEN CRACKED OR DAMAGED TO BE REJECTED.
9. REMOVE ALL NURSERY STAKES UPON INSTALLATION. TREES THAT HAVE GROWN TOO CLOSE TOGETHER IN THE NURSERY, RESULTING IN WEAK TRUNKS TO BE REJECTED.

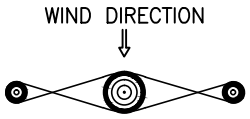

TREE TIE PLAN VIEW:

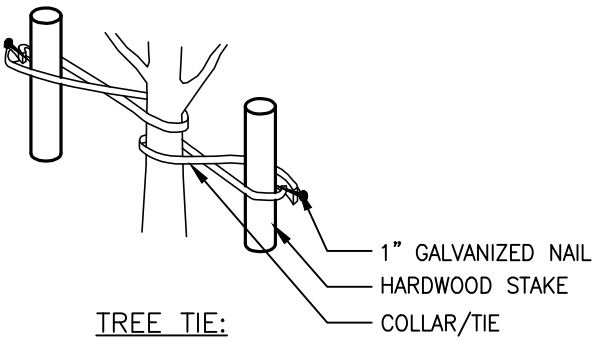

TREE TIE:

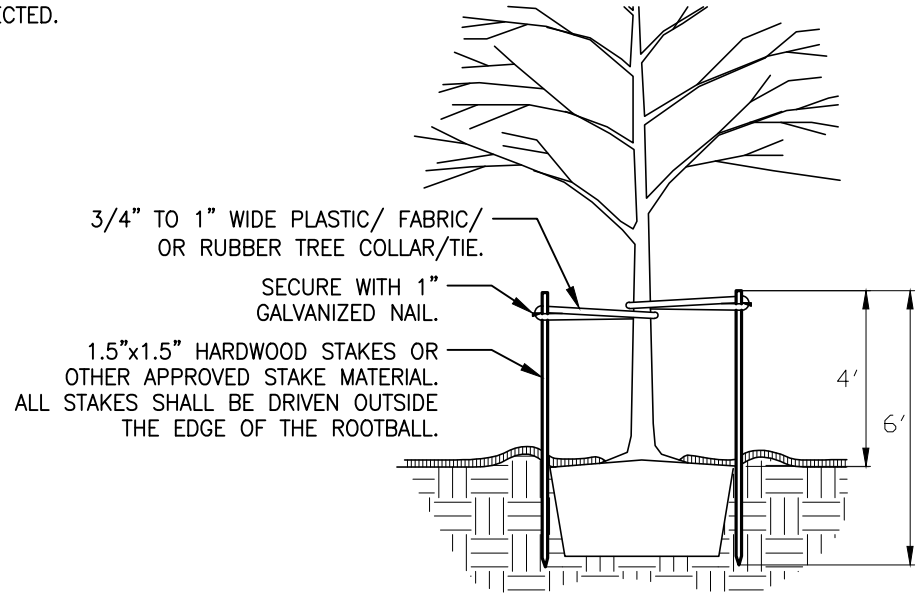

TREES LESS THAN 3" CALIPER/36" BOX

APPROVED _____ DATE _____

CITY ENGINEER

DRAWN: –	IMPROVEMENT STANDARDS	CITY OF CERES
DATE: –		TYPICAL TREE STAKING
SCALE:		
REVISED:		PLATE NO. Y–2A